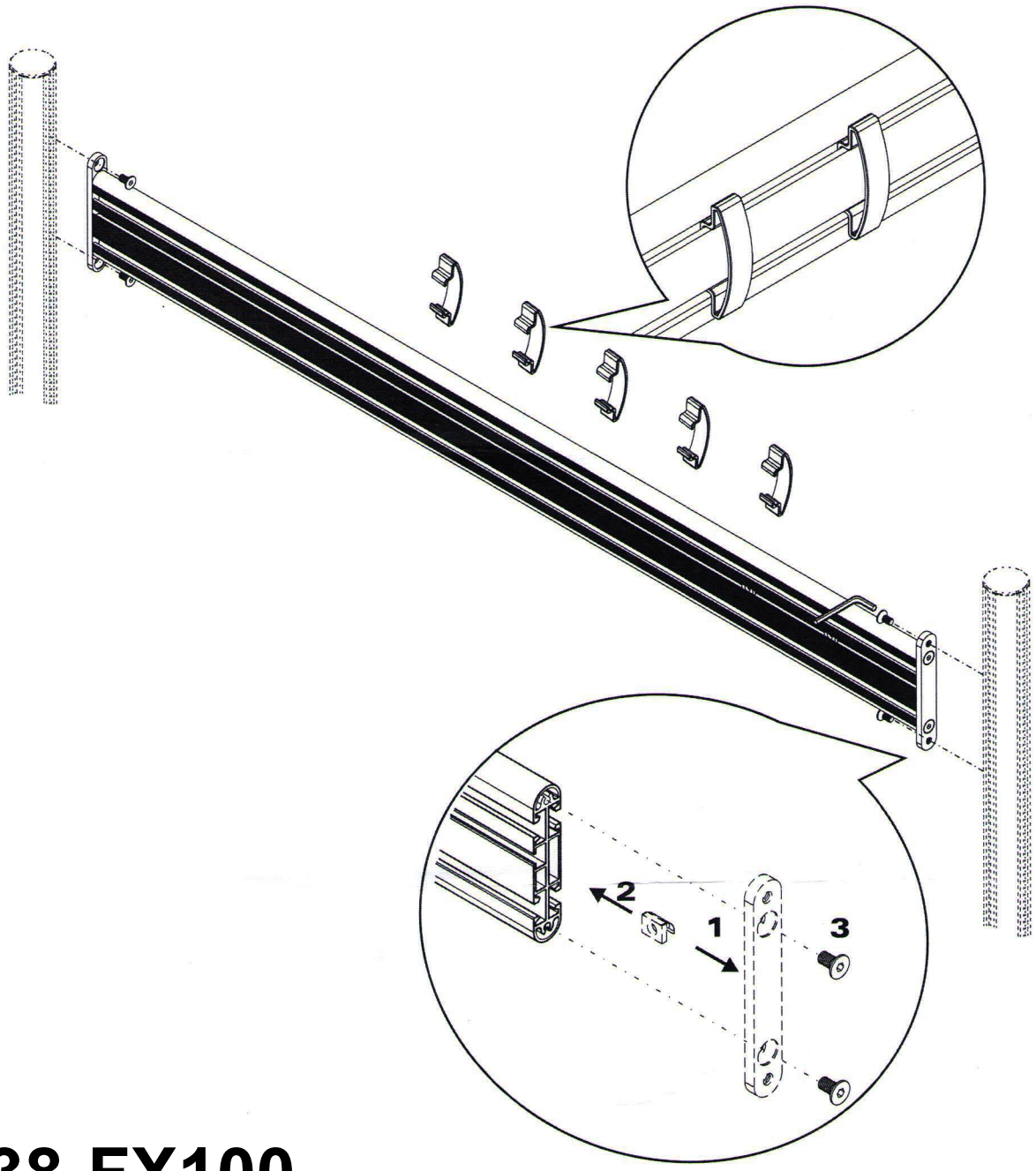

438-FX100

X5	X4	X1

438-FX160

X8	X4	X1