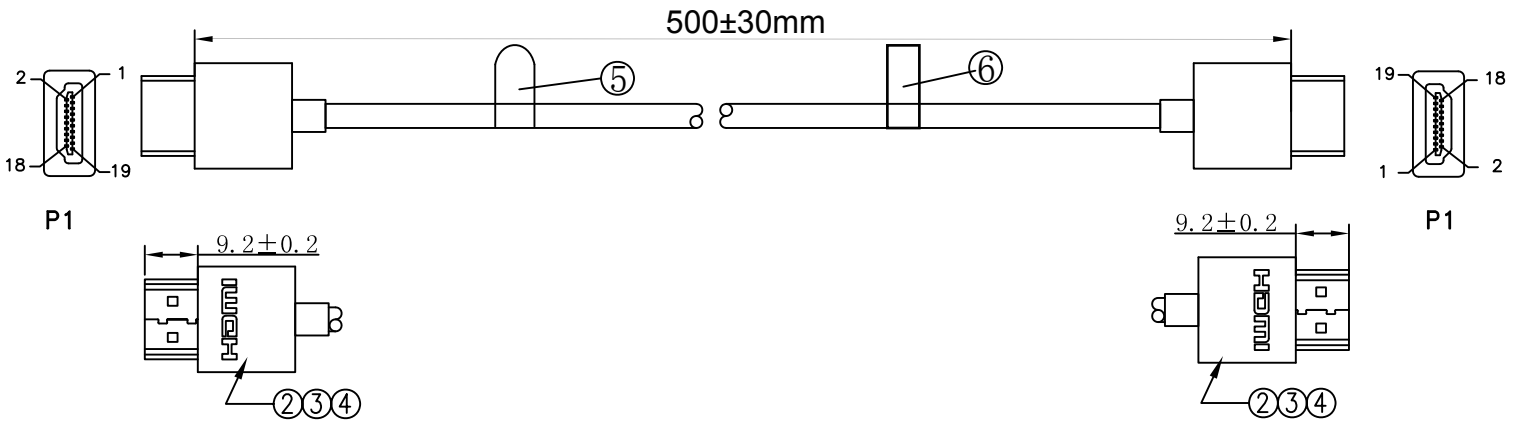

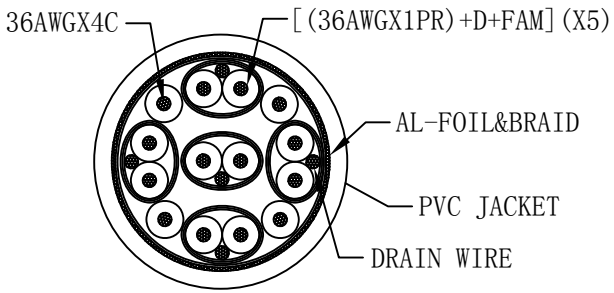

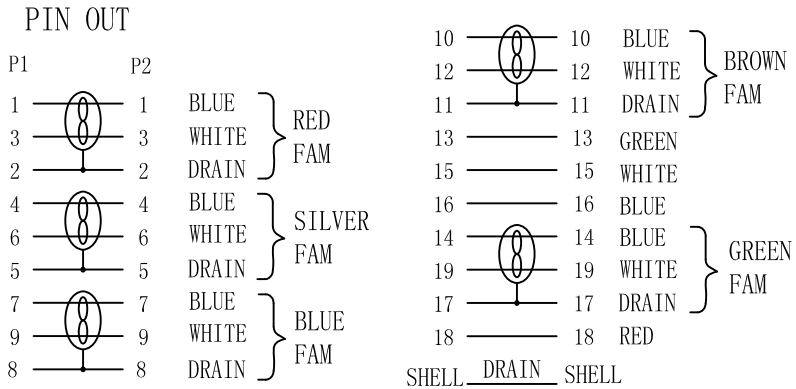

NOTES:
1.ELECTRICAL PROPERTIES:
1.1 100% OPEN AND SHORT TEST
1.2 CONDUCTOR RESISTANCE: 5 OHMS
1.3 INSULATION RESISTANCE: 10 MEGOHMS
1.4 HI-POT: DC300V/0.01S
1.5 100% HDTV, BLUE RAY DVD TEST(1080P)
1.6 ALL CABLE PRODUCTION PROCESS ARE CONTROLED BY ATC TEST DEVICE.
2. ALL MATERIAL BE RoHS COMPLIANT.

NO.	PARTS NAME	Q' TY	SPECIFICATION
⑥	TAG	1PCS	HDMI®HIGH SPEED WITH ETHERNET TAG
⑤	TAG	1PCS	DELTACO TAG
④	HOOD MOLD	2PCS	BLACK ABS SHELL
③	INNER MOLD	2PCS	PE
②	HDMI 19M	2PCS	GOLD PLATED SHELL
①	CABLE	1PCS	(36AWG*1P+D+FAM)*5+36AWG*4C+AEB OD:4.0mm±0.2mm BLACK PVC JACKET HIGH SPEED HDMI® CABLE WITH ETHERNET

APPROVED	CHECKED	DRAWN	CUSTOMER:	
			ITEM NO.	HDMI-1090
			DRAW NO.	
			UNIT	mm
			SCALE	NONE

DESCRIPTION:

HDMI 19PIN/M-HDMI 19PIN/M

DELTACO